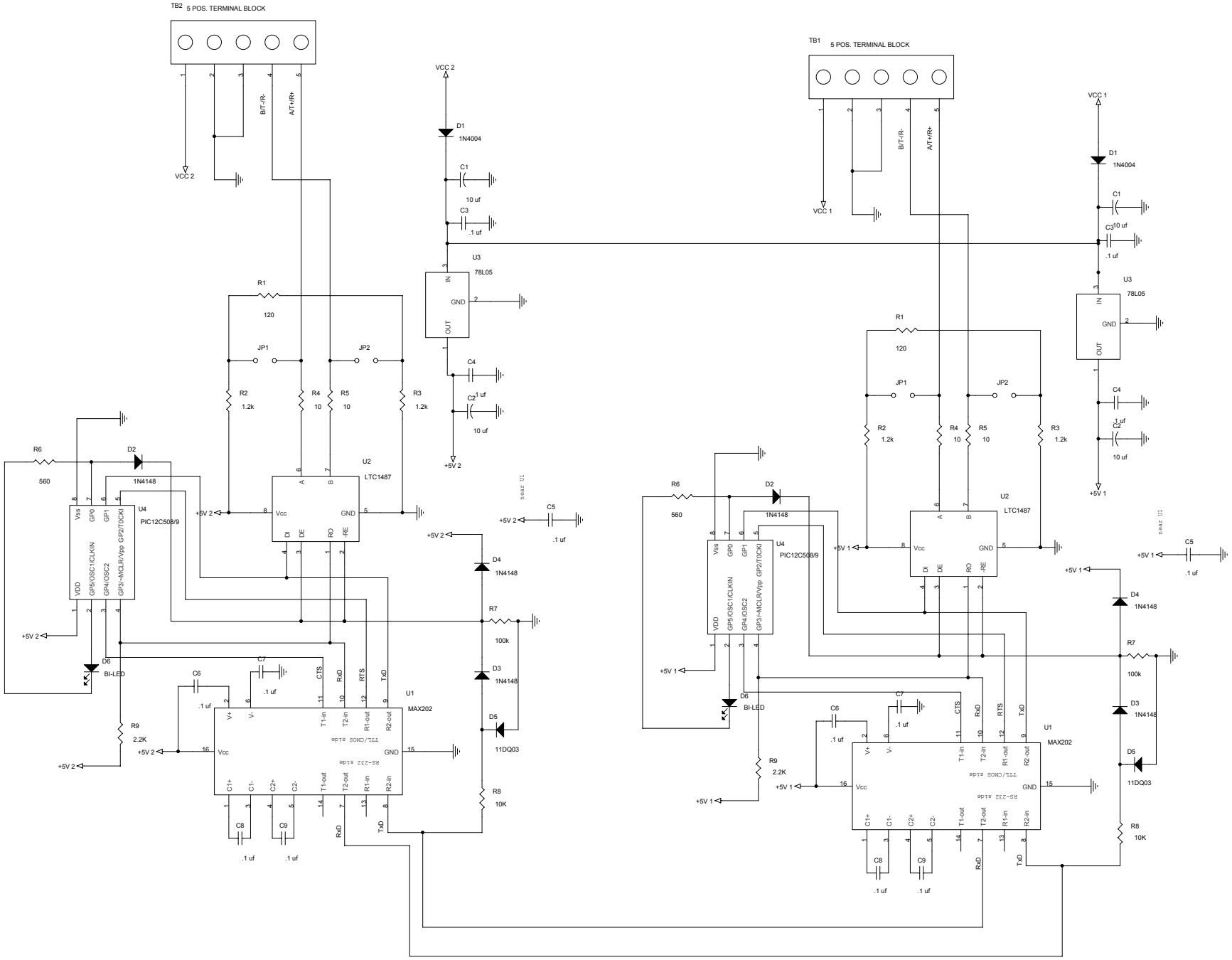

Title	485-RPT SCHEMATIC	
Size C	Document Number <Doc>	Rev
Date: Friday, June 27, 2003	Sheet 1 of 1	